Mustang Sally - 1989
ProKennex Catamaran

General Electrical Layout

June 2005

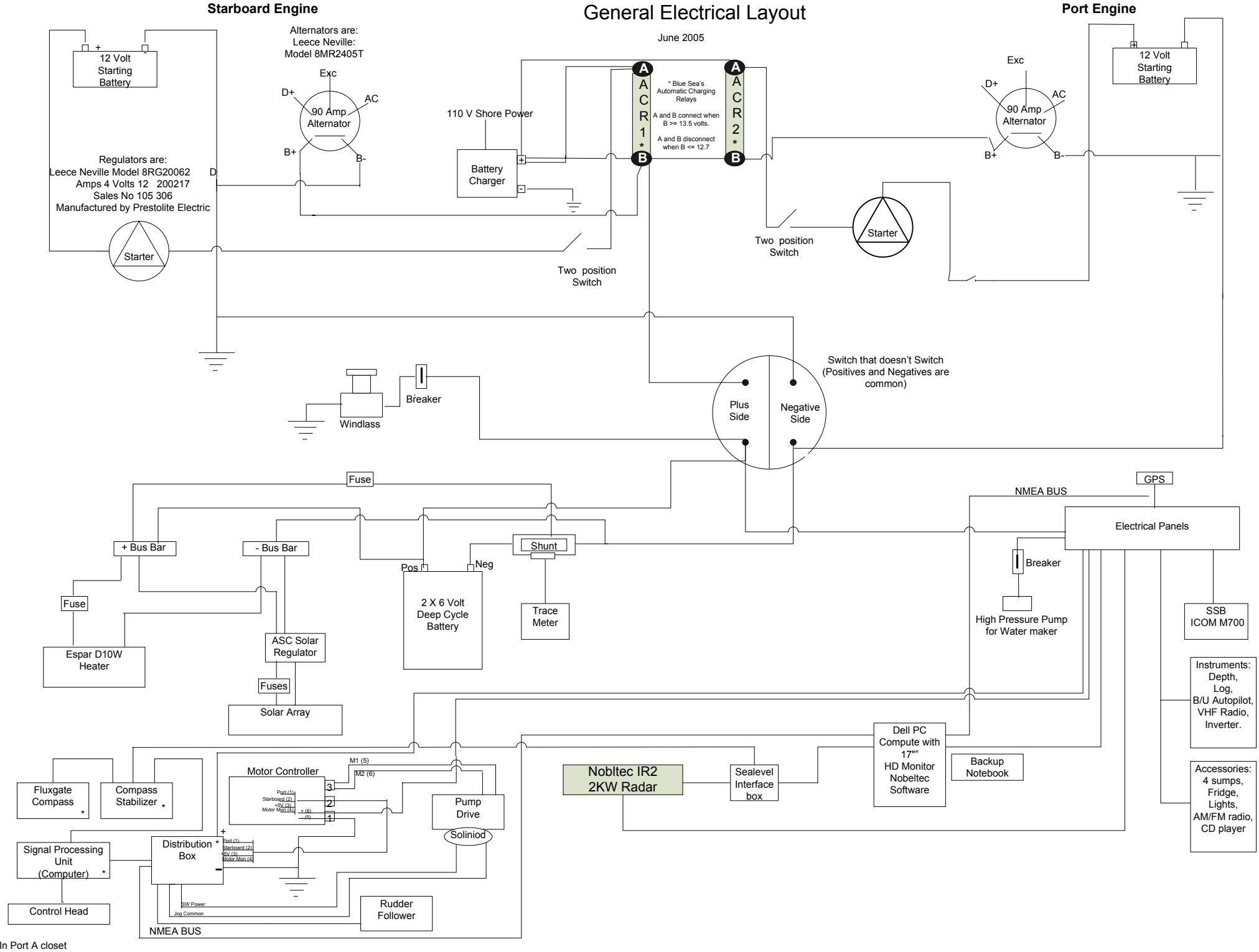

* In Port A closet